NS D3 Electron Energy and Light

Name_____

From fireworks to stars, the color of light is useful in finding out what's in matter. The emission of light by hydrogen and other atoms has played a key role in understanding the electronic structure of atoms. Trace materials, such as evidence from a crime scene, lead in paint or mercury in drinking water, can be identified by heating or burning the materials and examining the color(s) of light given off by an element when "excited" by the introduction of energy from an outside source, resulting in the emission of a bright-line spectra.

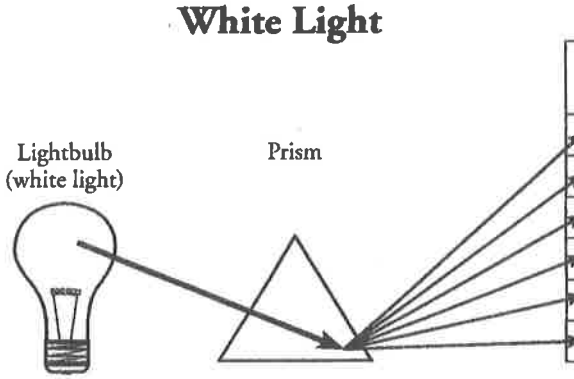

Color	Photon Energy ($\times 10^{-21}$) (J)	Wavelength Range (nm)	Speed (m/s)
Reds	269–318	625–740	3.00×10^8
Oranges	318–337	590–625	3.00×10^8
Yellows	337–352	565–590	3.00×10^8
Greens	352–382	520–565	3.00×10^8
Blues	382–452	440–520	3.00×10^8
Violets	452–523	380–440	3.00×10^8

1. Trace the arrows in the diagram above and shade in the table with the appropriate colored pencils.
2. What happens to white light when it passes through a prism?
3. Why are the color labels in the table above plural (i.e., "Reds" rather than "Red")?
4. Do all colors of light travel at the same speed?
5. Do all colors of light have the same energy? If no, which colors have the highest energy and the least energy, respectively?
6. Which color corresponds to the longest wavelengths?
7. Which color corresponds to the shortest wavelengths?
8. Write a sentence that describes the relationship between wavelength and energy of light.

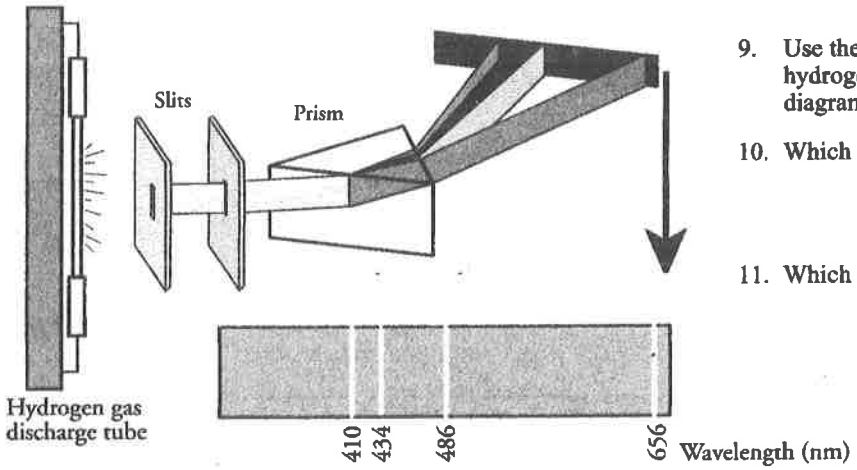

9. Use the appropriate colored pencils to color the hydrogen emission spectral lines as shown in the diagram.
10. Which color of light has the most energy?
11. Which color of light has the least energy?

12. The spectral lines shown below are for boron and were produced using the same method as the hydrogen shown on the previous page. Use the appropriate colored pencils to color the boron emission spectral lines

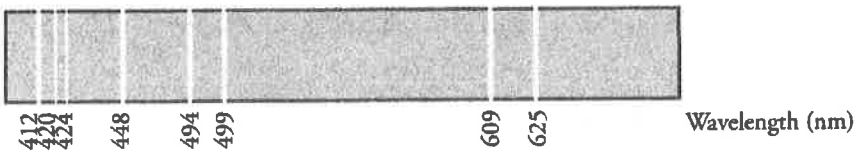

13. A gas discharge tube filled with boron does not emit the same wavelengths of light as a tube filled with hydrogen? Why not?

14. "The spectral lines for atoms are like fingerprints for humans." How do the spectral lines for hydrogen and boron support this statement?

Circle the *appropriate* word to complete each statement in Questions 15–18.

15. Electrons and protons *attract / repel* each other.

16. As an electron gets closer to the nucleus the attraction / repulsion to the nucleus gets *stronger / weaker*.

17. For an electron to move from an energy level close to the nucleus to an energy level far from the nucleus it would need to *gain / lose* energy.

18. For an electron to move from an energy level far from the nucleus to an energy level close to the nucleus it would need to *gain / lose* energy.

STOP and read this before proceeding....and check in with the teacher before moving on to #19

Niels Bohr modified Rutherford's Nuclear Atom model to explain how light interacted with the electrons in an atom to produce spectral lines. His model included electrons orbiting the nucleus at specific energy levels. Electrons absorb energy from various sources, for example heat or electricity, when they move from lower energy levels (ground state) to higher energy levels (excited states). Energy is released as electrons return to their lower energy levels.

19. Is energy *absorbed* or *released* for the electron transition shown by the solid black arrow in the diagram to the right? Explain how you know.

20. Sketch in a green arrow that would represent an electron transitioning in the same direction as the black arrow, but would be a transition of less of energy.

21. Sketch in a orange arrow that would represent an electron transitioning in the opposite direction as the black arrow, and would be a transition of less of energy.

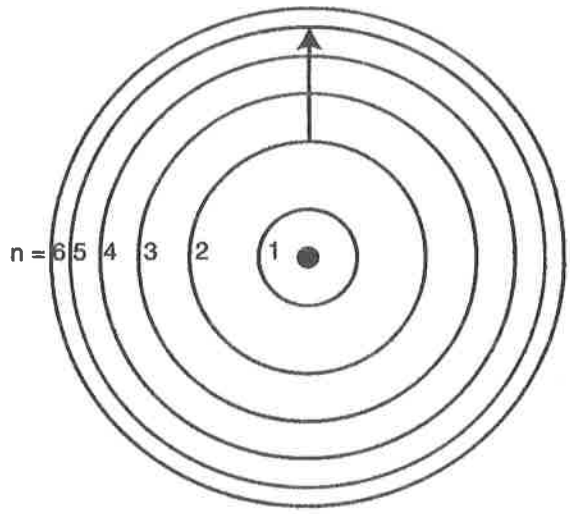

Each of the diagrams below represents a transition in the hydrogen atom that causes one of the colored spectral lines as represented at the bottom of page 1.

22. Identify the drawing below that depicts a hydrogen atom with an electron moving from energy level 5 to energy level 2. Label the picture with "n=3 to n=2" and color the wavy line with one of the four colors represented on page 1 to represent the appropriate corresponding color of light emitted. Complete each of the following statements by circling the appropriate word(s).
    (a) This 3 to 2 electron transition *absorbs / releases* energy.
    (b) This electron moves from a *lower / higher* energy state to a *lower / higher* energy state.
    (c) Light is *absorbed / released* in the 3 to 2 electron transition.

A. _____

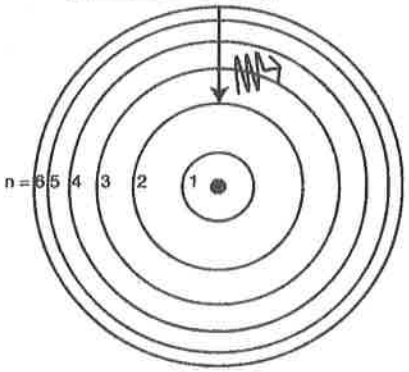

B. _____

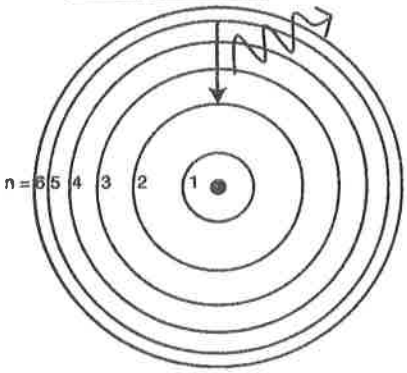

C. _____

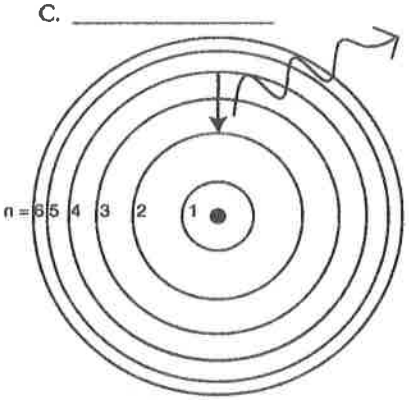

D. _____

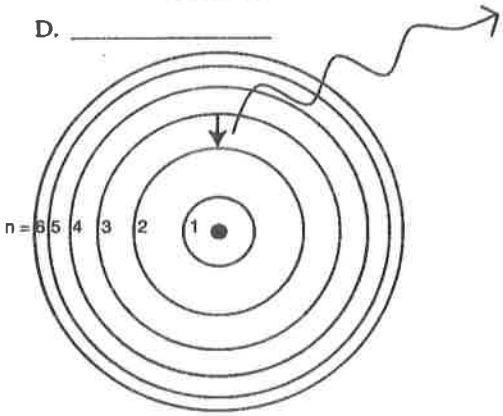

23. Label the remaining drawings above with the electron transitions that are occurring (n=? to n=?), the wavelengths, and the considering the spectrum on page 1 color the the wavy line to represent the corresponding color of light emitted.

24. Consider the electron transitions in the diagram above.
    (a) Which of the electron transitions involves the most energy?
    (b) Explain why this transition involves the most energy based on your understanding of the attractive forces between the electrons and protons in the atom.
    (c) Explain why a single atom of hydrogen cannot produce all four hydrogen spectral lines simultaneously
    (d) If Question (c) is true, how is it that we can we see all four colors from our hydrogen gas discharge tube simultaneously?

25. The hydrogen spectral emission lines shown on the previous pages are only the wavelengths of light that are in the visible range and therefore "seen" by the naked eye. However, many other wavelengths can be detected with special equipment.

    (a) Propose a hydrogen electron transition that involves light with a wavelength in the ultraviolet (UV) range (10–400 nm).

    (b) Propose a hydrogen electron transition that involves light with a wavelength in the infrared (IR) range (1000–106 nm).

26. Below are diagrams for the bright line spectra of four elements and the spectrum of a mixture of gases.

    (a) Is the high-energy end of the emission spectra shown below at the left or right side? What do you notice about the way the emission spectra above were drawn on this page compared to the hydrogen and boron emission spectra shown on page 1 & 2?

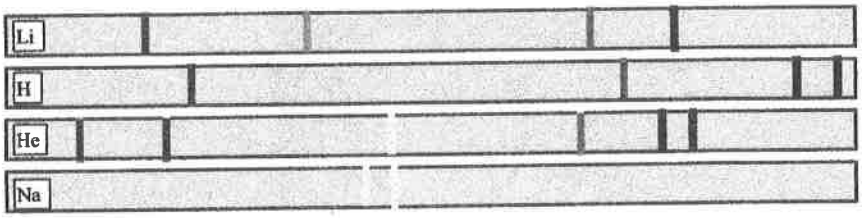

    (b) Which element(s) are not present in the Unknown?

    (c) Which element(s) are in the Unknown?

27. We have been investigating and comparing emission spectra. The lines of light that emanate from a material that has been "excited" by the addition of an outside source of energy. Alternatively, scientists also look at absorption spectra. In an absorption spectra, visible light is sent through a sample, and the wavelengths of light corresponding to the energy of the electronic transitions are absorbed. This makes an absorption and emission spectrum "opposite" to each other.
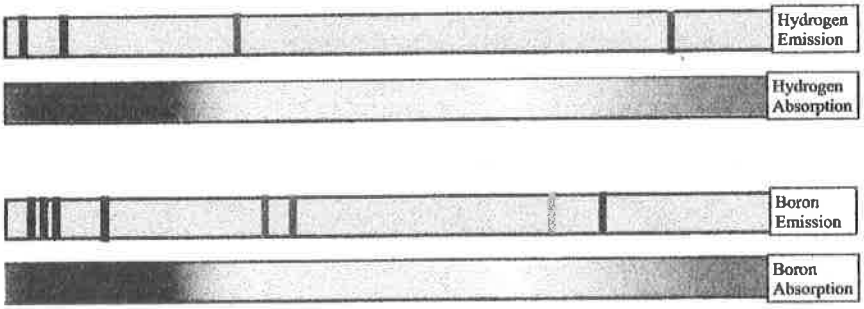
    The spectra below show the emission spectra for hydrogen and boron as shown on page 1 and 2, although a slightly different size, the spectral lines are placed appropriately. Use a black Sharpie to blacken in what you think the absorption spectra of hydrogen and boron would look like in the empty spectrum below each of the two emission spectra.